1		ORIGINAL RELEASE	

UNCONTROLLED DOCUMENT WILL NOT BE UPDATED

INSULATED

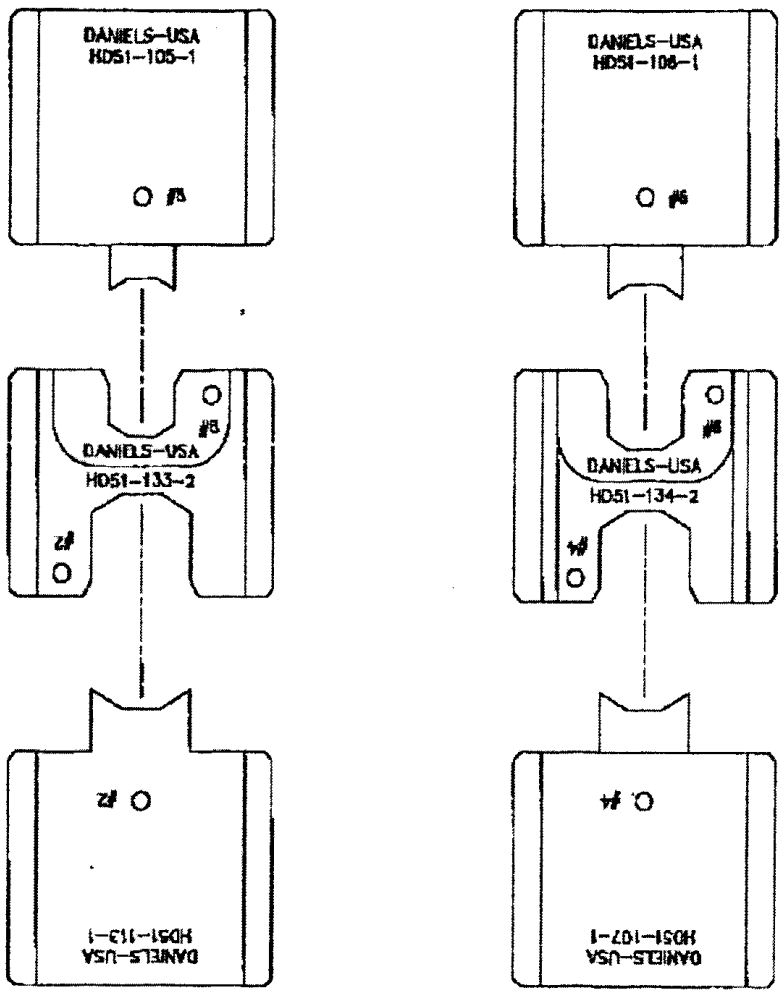

NON-INSULATED

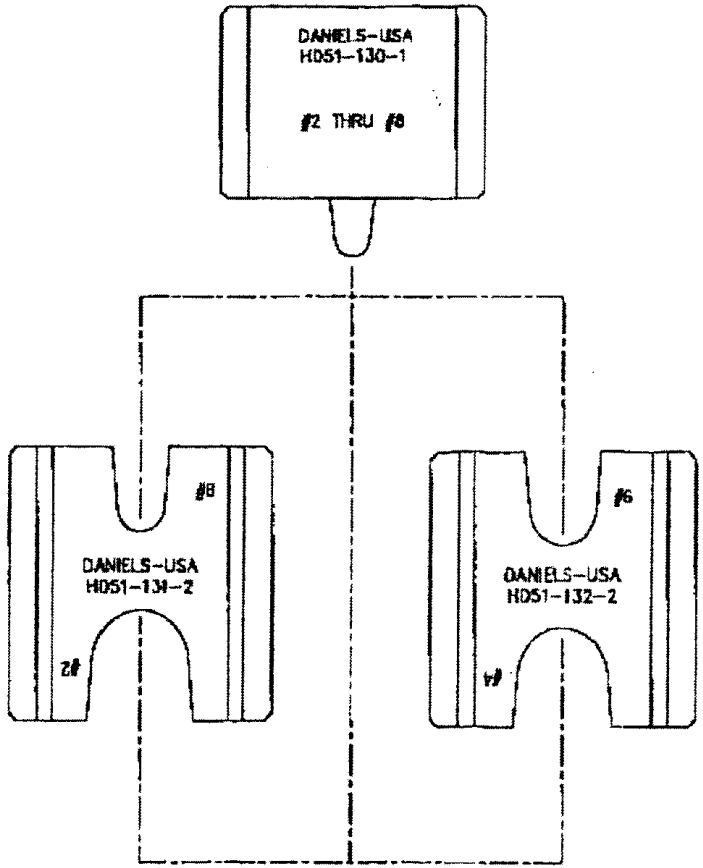

DIE USAGE TABLE

SIZE	INSULATED		NON-INSULATED	
#2	HD51-113-1	HD51-133-2	HD51-130-1	HD51-131-2
#8	HD51-105-1			
#4	HD51-107-1	HD51-134-2		HD51-132-2
#6	HD51-106-1			

RESTRICTED & CONFIDENTIAL

DO NOT SCALE DRAWING

ITEM	PART NO.	QTY.	DESCRIPTION/REMARKS

DANIELS MANUFACTURING CORP.
ORLANDO, FLORIDA
OAK, TNM

HD51 DIE LAYOUT FOR KITS
ENVELOPE DRAWING

SIZE	SCALE	CAD FILE	SHEET	OF
C	NTX	HD51KIT-ENV	1	1

P/N HD51KIT-ENV