REVISIONS						
REV	ECO NO.	DESCRIPTION	BY	DATE	APP'D BY	DATE
1		ORIGINAL RELEASE	AAM	11/16/1992	DE	11/16/1992
2		ADDED Ø.218	AAM	7/29/1996	DE	7/29/1996
3	23590	UPDATED AND ADDED GAGE	TonyD	11/18/2014		
4		"NOT SUPPLIED WITH TOOL" ADDED TO GAGE	TonyD	1/11/2016		

UNCONTROLLED DOCUMENT
WILL NOT BE UPDATED

DIMENSIONS IN INCHES - UNLESS OTHERWISE SPECIFIED

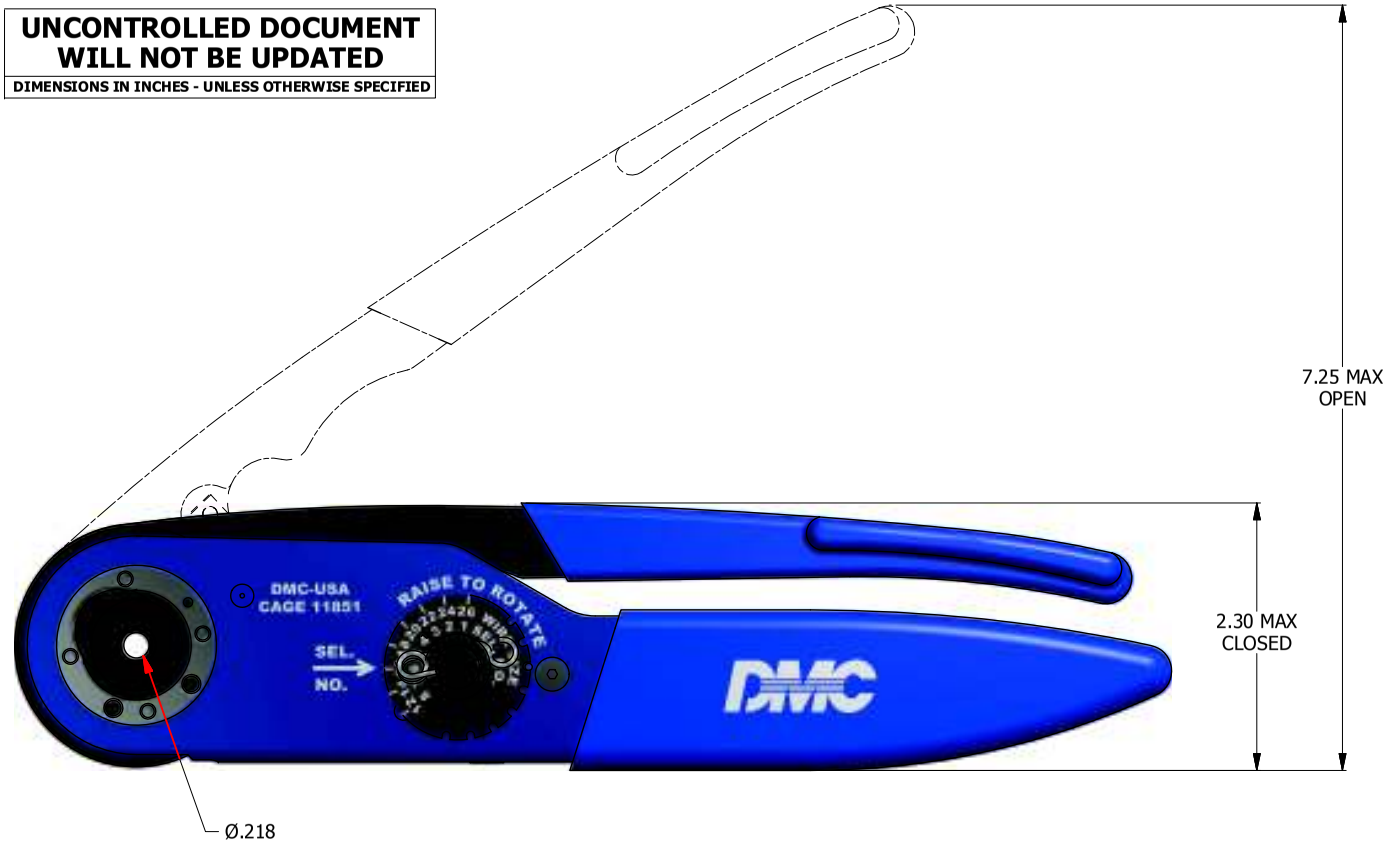

GAGING LIMITS OF INDENTERS

SEL NO	INSPECTION GAGE Ø GO ±.0001	INSPECTION GAGE Ø NO-GO ±.0001
1	.0280	.0330
2	.0320	.0370
3	.0360	.0410
4	.0390	.0440
5	.0450	.0500
6	.0520	.0570
7	.0590	.0640
8	.0680	.0730
CHECK WITH GAGE: G125 SEL #4		

GAGE: G125
(NOT SUPPLIED WITH TOOL)

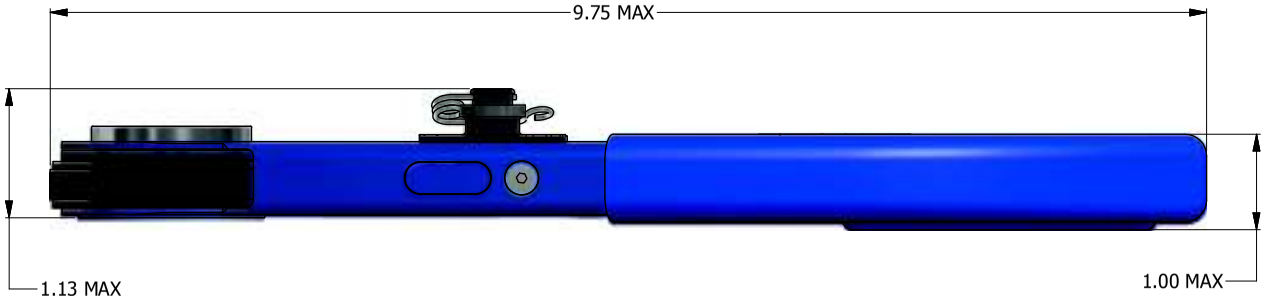

MATERIAL	ITEM	PART NO.	QTY.	DESCRIPTION / REMARKS
N/A				

DRN. A. MOO-YOUNG DATE 11/16/1992
CHK'D. DE DATE 11/16/1992

DANIELS MANUFACTURING CORP.
ORLANDO, FLORIDA
CAGE 11851

RESTRICTED & CONFIDENTIAL

CONFIDENTIAL PROPERTY OF DANIELS MANUFACTURING CORP. NOT TO BE DISCLOSED TO OTHERS. REPRODUCTION OR USED FOR ANY OTHER PURPOSE EXCEPT AS AUTHORIZED IN WRITING BY DANIELS MANUFACTURING. MUST BE RETURNED TO DANIELS MANUFACTURING CORP. ON COMPLETION OF ORDER OR PURPOSES FOR WHICH LENT.

CREATED FROM AN INVENTOR MODEL.
CHANGES MUST BE REFLECTED IN THE 3D PART

DO NOT SCALE DRAWING

HEAT TREAT: N/A

FINISH: N/A

NOTE:
THIS DRAWING IS AN OUTLINE DRAWING OF THE RESPECTIVE DMC PART NUMBER INDICATED. ACTUAL DMC PART NUMBER IS CAD PART NUMBER WITHOUT THE "-ENV" SUFFIX

TITLE: CRIMP TOOL
M22520/1-01
ENVELOPE DRAWING

WHERE USED:

SIZE	SCALE	CAD P/N	SHEET
C	1.25X	AF8-ENV	1 OF 1
		DWG. NO. AF8	REV. 4